BROEN-LAB

Drejervaenget 2, 5610 Assens, Denmark
Phone: +45 6376 6376
E-mail: lab@broen-lab.com
Web : broen-lab.com



FITTINGS FOR WATER

Premium range

99B0048 - 08.08.2024

TABLE OF CONTENTS

BROEN-LAB UniFlex™ *Page 3*

Configuration overview *Page 4*



Bench mounted fitting with swivel spout *Page 6*



Bench mounted fitting on a column *Page 7*



Bench mounted two valve fitting on a U-shaped column *Page 8*



Bench mounted two valve fitting on a T-shaped column *Page 9*



Bench mounted fitting on a coloumn with swivel spout *Page 10*



Bench mounted three valve fitting *Page 11*



Bench mounted hands-free SensorTap *Page 12*



Wall mounted fitting 90° valve *Page 13*



Wall mounted fitting straight valve *Page 14*



Wall mounted fitting with swivel U-spout *Page 15*



Wall mounted fitting with swivel U-spout *Page 16*



Wall mounted 90° valve with rear wall connection (RWC) *Page 17*



Wall mounted straight valve with rear wall connection (RWC) *Page 18*



Wall mounted fitting with swivel U-spout and rear wall connection (RWC *Page 19*



Wall mounted 90° fitting for exposed piping or built-in installation *Page 20*



Wall mounted staight fitting for exposed piping or built-in installation *Page 21*



Suspended fitting with two 90° valves *Page 22*



Bench mounted two handle one hole mixer with swivel spout *Page 23*



Bench mounted one handle one hole mixer *Page 24*



Bench mounted one handle one hole BioLab mixer *Page 25*



Bench mounted one handle one hole mixer *Page 26*



Bench mounted one handle one hole mixer with hand shower *Page 27*



Bench mounted two handle two hole mixer on coloumns with swivel spout *Page 28*



Bench/Wall mounted two handle two hole mixer with swivel spout *Page 29*



Wall mounted two handle two hole mixer with swivel spout *Page 30*



Wall mounted one handle two hole mixer with swivel spout *Page 31*

BROEN-LAB UniFlex™ hoses for water *Page 32*

Headworks *Page 34*

Accessories *Page 35*

Ordering information *Page 38*

THIS IS BROEN-LAB UNIFLEX™ PREMIUM

BROEN-LAB UniFlex™ Premium line offers a very high quality and durability combined with the complete program, which adds up to low LCC (Life Cycle Costs). Our Metal Handle line takes the standards in the market to a higher level.

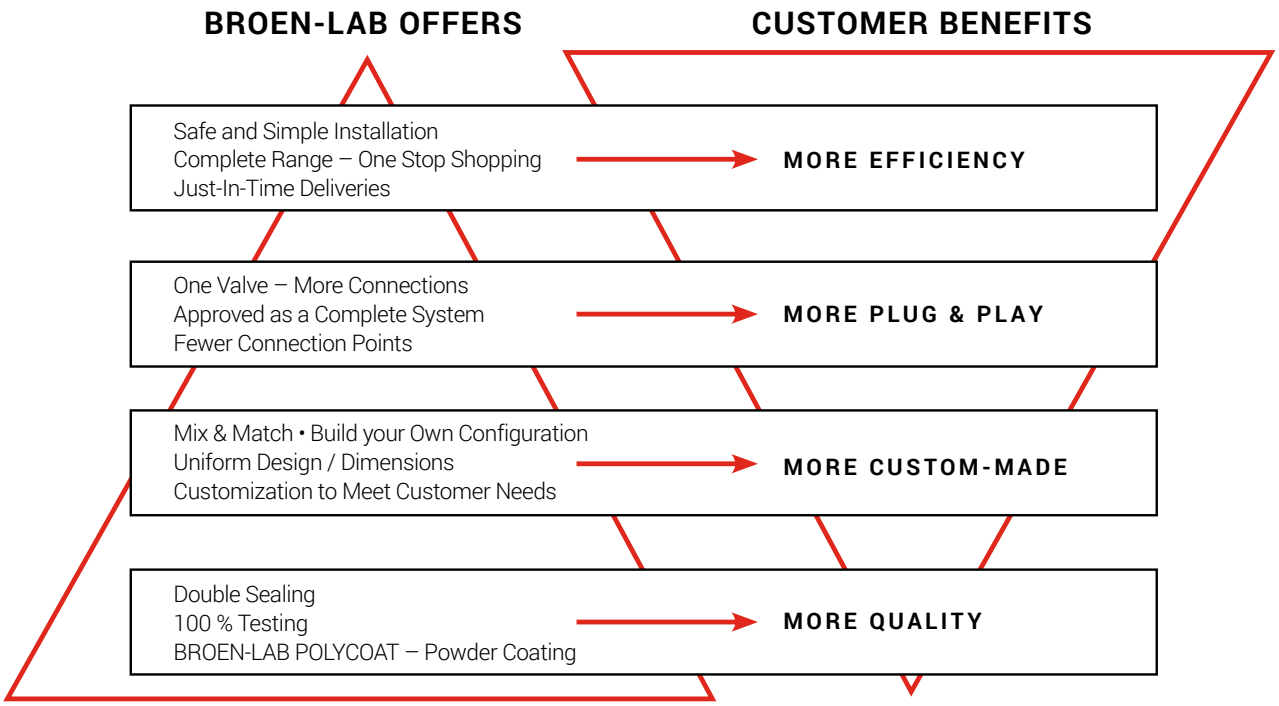

BROEN-LAB UniFlex™ Premium fittingss for water are designed for laboratory use. The operation and the configuration of the fittings are highly adapted to the requirements of a modern laboratory. The fittings are surface treated with BROEN-LAB POLYCOAT powder coating, which is highly resistant to most chemicals, UV fading and heat (for more information please refer to "BROEN-LAB POLYCOAT" brochure.)

Most water fittings are as standard delivered with a removable hose nozzle with a loose union nut which offers quick and effortless assembly and disassembly when a hose has been fixed to the nozzle.

As an option it is possible to get water fittings with integrated check valve, which prevent backflow.

BROEN-LAB UniFlex™ Premium for water incorporate a BALLOFIX® ball valve (where relevant), which offers a number of advantages such as local shut-off (e.g. in connection with product service) and pre-setting for experimental purposes.

THIS IS BROEN-LAB UNIFLEX™

BROEN-LAB UniFlex™ is a unique and patented connection, which allows customers to choose from various connection methods, such as hoses, Cu, PEX of Stainless Steel pipes, without changing the valve itself. It provides unique flexibility, not only for the installer, but also for the end-user. Due to the flexibility of the system, the quick installation and savings on fittings, this system offers lower TIC (Total Installed Costs).

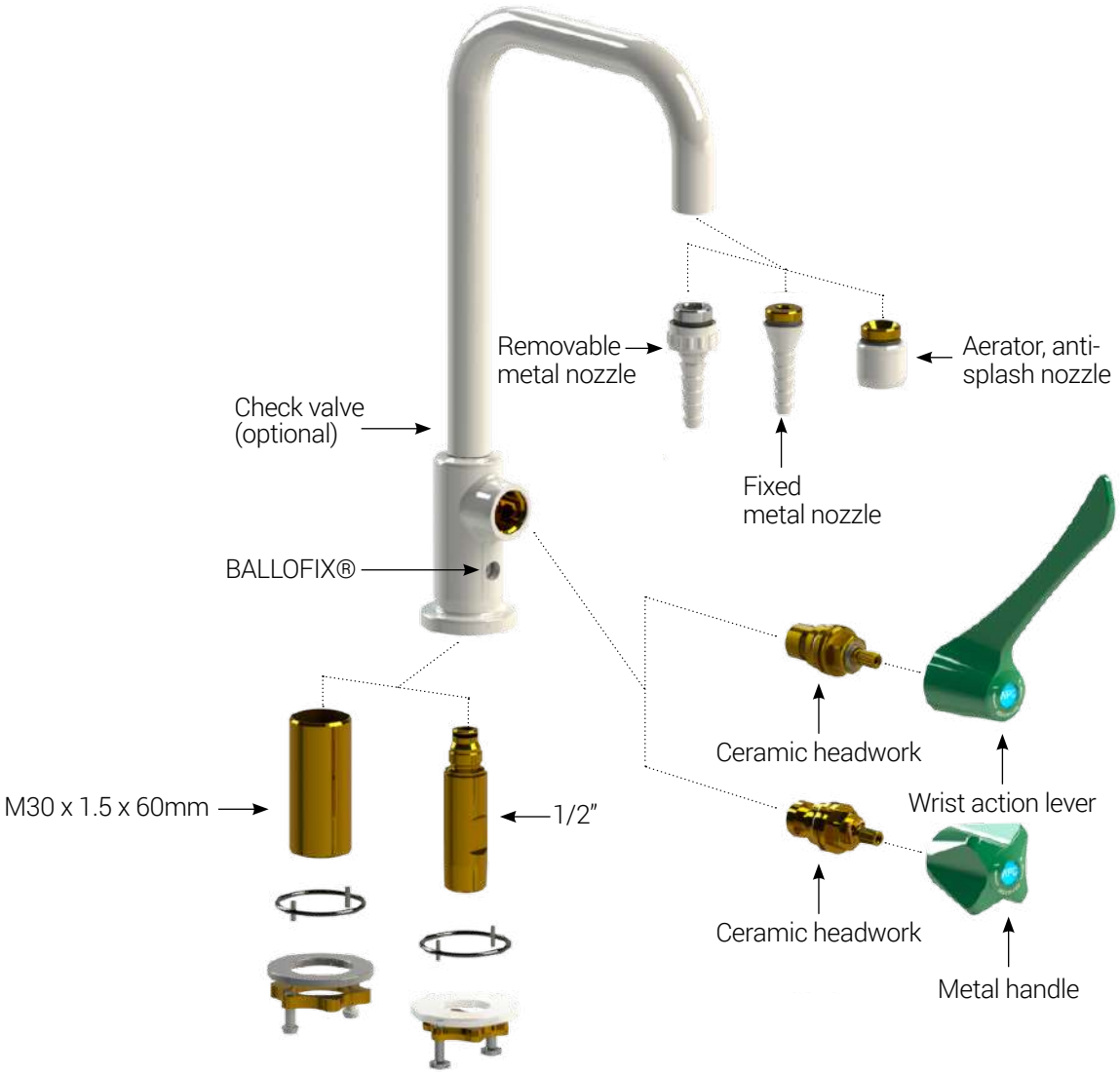

Optional hoses to add



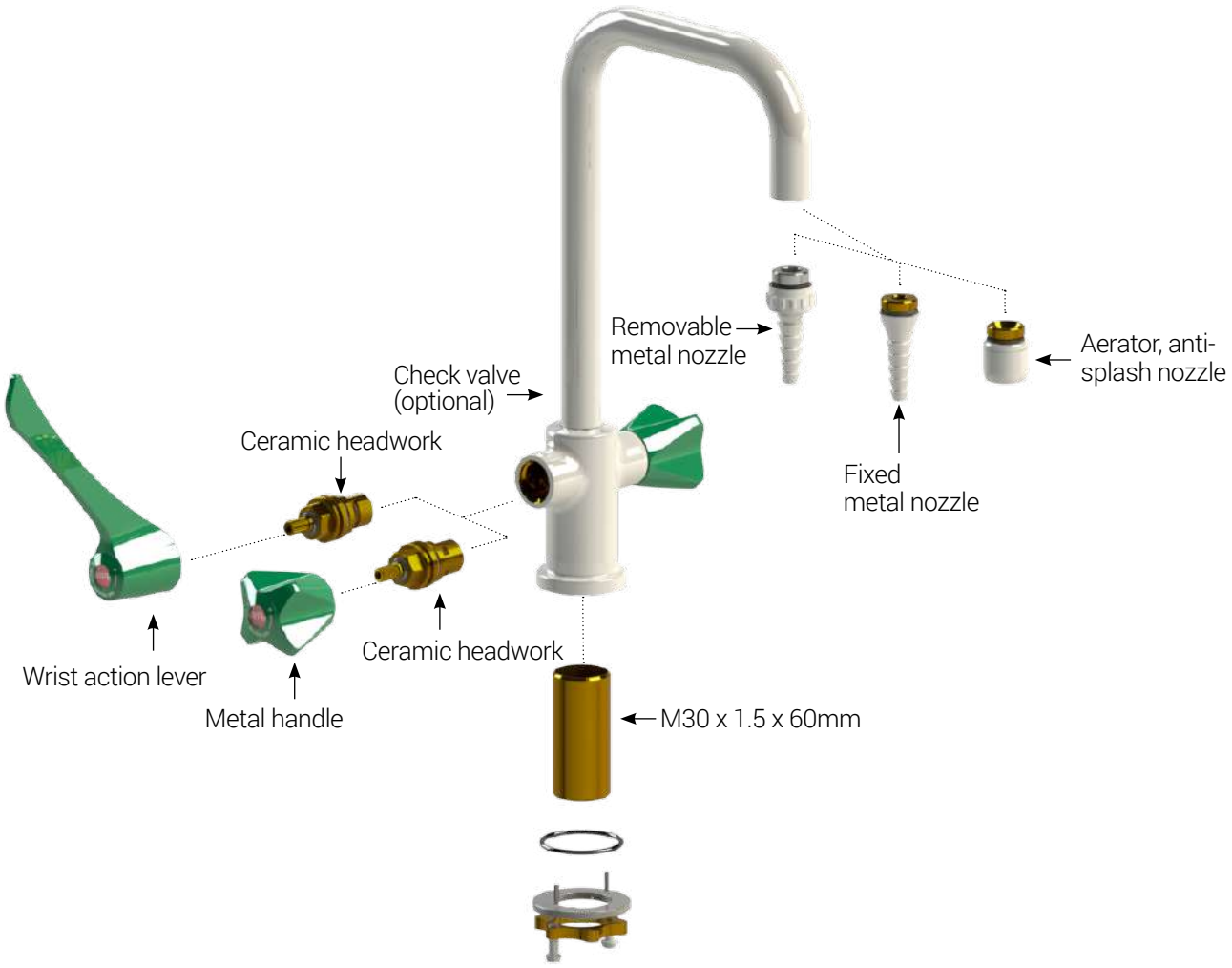

Optional hoses to add

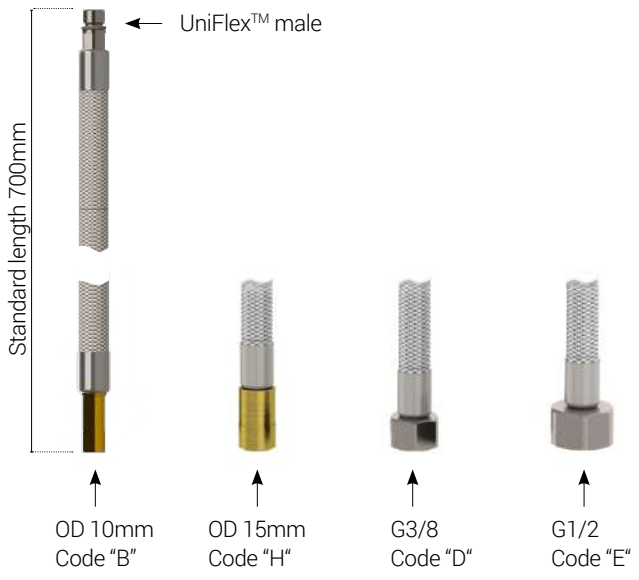

BENCH MOUNTED FITTING WITH SWIVEL SPOUT

SPECIFICATIONS

The fitting is delivered with an integrated BALLOFIX® ball valve.
Handle: Metal, BROEN-LAB POLYCOAT powder coated with media indication according to EN13792
Spout: Full swivel action
Hose nozzle: Removable metal
Headwork: Ceramic
Opening/closing function: 180° (wrist action lever: 90°)
Temperature range: 0-90°C
Max. working pressure: 10 bar / 147 psi
Test pressure: 1 x working pressure
Weight: 1.4 kg



MATERIALS WITH MEDIA CONTACT

Metals: Brass
Plastics: POM, PTFE
Sealing: EPDM
Lubricant: Silicone based
Ceramics: Al_2O_3 96%

ORDERING INFORMATION

For standard configuration please refer to the item numbers below.

Other options:
- aerator
- flow restrictor (5 l/min)
- fixed hose nozzle
- integrated non-return valve
- fixed spout
- alternative hose inlet connection / without a hose
- other inlet options (type, length)
- national approvals
- WPH (Water Potable Hot)
- WNH (Water Non-Potable Hot
- 110° limited swivel action

Configuration options

Choose handle and standout lenght:

	S = 150 mm	S = 200 mm	S = 250 mm	S = 300 mm
Metal handle	2534 001 10**XX** - **YY**	2534 002 10**XX** - **YY**	2534 017 10**XX** - **YY**	2534 016 10**XX** - **YY**
Wrist lever	2534 015 10**XX** - **YY**	2534 018 10**XX** - **YY**	2534 050 10**XX** - **YY**	2534 051 10**XX** - **YY**

Replace **XX** with one of these media types:

01 • Potable water, cold **02** • Potable water, hot **07** • Non-potable water, cold **08** • Non-potable water, hot

Replace **YY** with the inlet type you need on page 39

BENCH FITTING MOUNTED ON A COLUMN

SPECIFICATIONS

The fitting is delivered with an integrated BALLOFIX® ball valve.
Handle: Metal, BROEN-LAB POLYCOAT powder coated with media indication according to EN13792
Hose nozzle: Removable metal
Headwork: Ceramic
Opening/closing function: 180° (wrist action lever: 90°)
Temperature range: 0-90°C
Max. working pressure: 10 bar / 147 psi
Test pressure: 1 x working pressure
Weight: 1.5 kg



MATERIALS WITH MEDIA CONTACT

Metals: Brass
Plastics: POM
Sealing: EPDM
Lubricant: Silicone based
Ceramics: Al_2O_3 96%

ORDERING INFORMATION

For standard configuration please refer to the item numbers below.

Other options:
- aerator
- flow restrictor (5 l/min)
- fixed hose nozzle
- integrated non-return valve
- alternative hose inlet connection / without a hose
- other inlet options (type, length)
- national approvals
- WPH (Water Potable Hot)
- WNH (Water Non-Potable Hot)

Configuration options

Choose handle and standout lenght

	S = 150 mm	S = 200 mm
Metal handle	2533 062 10**XX** - **YY**	2533 024 10**XX** - **YY**
Wrist lever	2533 067 10**XX** - **YY**	2533 025 10**XX** - **YY**

Replace **XX** with one of these media types:

01 • Potable water, cold **02** • Potable water, hot **07** • Non-potable water, cold **08** • Non-potable water, hot

Replace **YY** with the inlet type you need on page 39

BENCH MOUNTED TWO VALVE FITTING ON A U-SHAPED COLUMN

SPECIFICATIONS

The fitting is delivered with an integrated BALLOFIX® ball valve.

Handle: Metal, BROEN-LAB POLYCOAT powder coated with media indication according to EN13792

Hose nozzle: Removable metal

Headwork: Ceramic

Opening/closing function: 180° (wrist action lever: 90°)

Temperature range: 0-90°C

Max. working pressure: 10 bar / 147 psi

Test pressure: 1 x working pressure

Weight: 2.5 kg

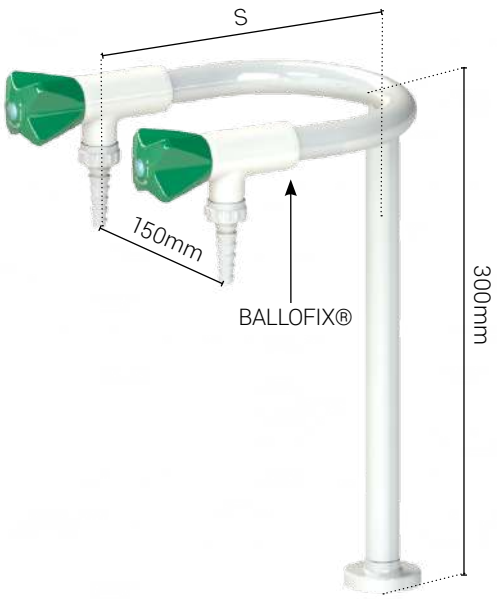

MATERIALS WITH MEDIA CONTACT

Metals: Brass

Plastics: POM

Sealing: EPDM

Lubricant: Silicone based

Ceramics: Al_2O_3 96%

ORDERING INFORMATION

For standard configuration please refer to the item numbers below.

Other options:
- aerator
- flow restrictor (5 l/min)
- fixed hose nozzle
- integrated non-return valve
- alternative hose inlet connection / without a hose
- other inlet options (type, length)
- national approvals
- WPH (Water Potable Hot)
- WNH (Water Non-Potable Hot)

Configuration options

Choose handle and standout lenght

	S = 150 mm	S = 200 mm
Metal handle	2533 068 10**XX** - **YY**	2533 070 10**XX** - **YY**
Wrist lever	2533 069 10**XX** - **YY**	2533 071 10**XX** - **YY**

Replace **XX** with one of these media types:

01 • Potable water, cold **02** • Potable water, hot **07** • Non-potable water, cold **08** • Non-potable water, hot

Replace **YY** with the inlet type you need on page 39

BENCH MOUNTED TWO VALVE FITTING ON A T-SHAPED COLUMN

SPECIFICATIONS

The fitting is delivered with an integrated BALLOFIX® ball valve.

Handle: Metal, BROEN-LAB POLYCOAT powder coated with media indication according to EN13792

Hose nozzle: Removable metal

Headwork: Ceramic

Opening/closing function: 180° (wrist action lever: 90°)

Temperature range: 0-90°C

Max. working pressure: 10 bar / 147 psi

Test pressure: 1 x working pressure

Weight: 2.3 kg



MATERIALS WITH MEDIA CONTACT

Metals: Brass
Plastics: POM
Sealing: EPDM
Lubricant: Silicone based
Ceramics: Al_2O_3 96%

ORDERING INFORMATION

For standard configuration please refer to the item numbers below.

Other options:
- aerator
- flow restrictor (5 l/min)
- fixed hose nozzle
- integrated non-return valve
- alternative hose inlet connection / without a hose
- other inlet options (type, length)
- national approvals
- WPH (Water Potable Hot)
- WNH (Water Non-Potable Hot)

Configuration options

Choose handle and standout lenght

	S = 300 mm	S = 400 mm
Metal handle	2533 072 10**XX** - **YY**	2533 074 10**XX** - **YY**
Wrist lever	2533 073 10**XX** - **YY**	2533 075 10**XX** - **YY**

Replace **XX** with one of these media types:

01 • Potable water, cold **02** • Potable water, hot **07** • Non-potable water, cold **08** • Non-potable water, hot

Replace **YY** with the inlet type you need on page 39

BENCH MOUNTED FITTING ON A COLUMN WITH SWIVEL SPOUT

SPECIFICATIONS

The fitting is delivered with an integrated BALLOFIX® ball valve.

Handle: Metal, BROEN-LAB POLYCOAT powder coated with media indication according to EN13792

Spout: Full swivel action

Hose nozzle: Removable metal

Headwork: Ceramic

Opening/closing function: 180° (wrist action lever: 90°)

Temperature range: 0-90°C

Max. working pressure: 10 bar / 147 psi

Test pressure: 1 x working pressure

Weight: 2 kg



MATERIALS WITH MEDIA CONTACT

Metals: Brass

Plastics: POM, PTFE

Sealing: EPDM

Lubricant: Silicone based

Ceramics: Al_2O_3 96%

ORDERING INFORMATION

For standard configuration please refer to the item numbers below.

Other options:
- aerator
- flow restrictor (5 l/min)
- fixed hose nozzle
- wrist action lever
- integrated non-return valve
- other standouts (S):
- alternative hose inlet connection / without a hose
- other inlet options (type, length)
- national approvals
- WPH (Water Potable Hot)
- WNH (Water Non-Potable Hot)

Configuration options

Choose version and standout lenght

	S = 150 mm	S = 200 mm
U-shape	2533 076 10**XX** - **YY**	2533 077 10**XX** - **YY**
S-shape	2533 127 10**XX** - **YY**	2533 140 10**XX** - **YY**

Replace **XX** with one of these media types:

01 • Potable water, cold **02** • Potable water, hot **07** • Non-potable water, cold **08** • Non-potable water, hot

Replace **YY** with the inlet type you need on page 39

BENCH MOUNTED THREE WAY VALVE FITTING

SPECIFICATIONS

The fitting is delivered with an integrated BALLOFIX® ball valve.
Handle: Metal, BROEN-LAB POLYCOAT powder coated with media indication according to EN13792
Spout: Full swivel action
Hose nozzle: Removable metal
Headwork: Ceramic
Opening/closing function: 180° (wrist action lever: 90°)
Temperature range: 0-90°C
Max. working pressure: 10 bar / 147 psi
Test pressure: 1 x working pressure
Weight: 3 kg

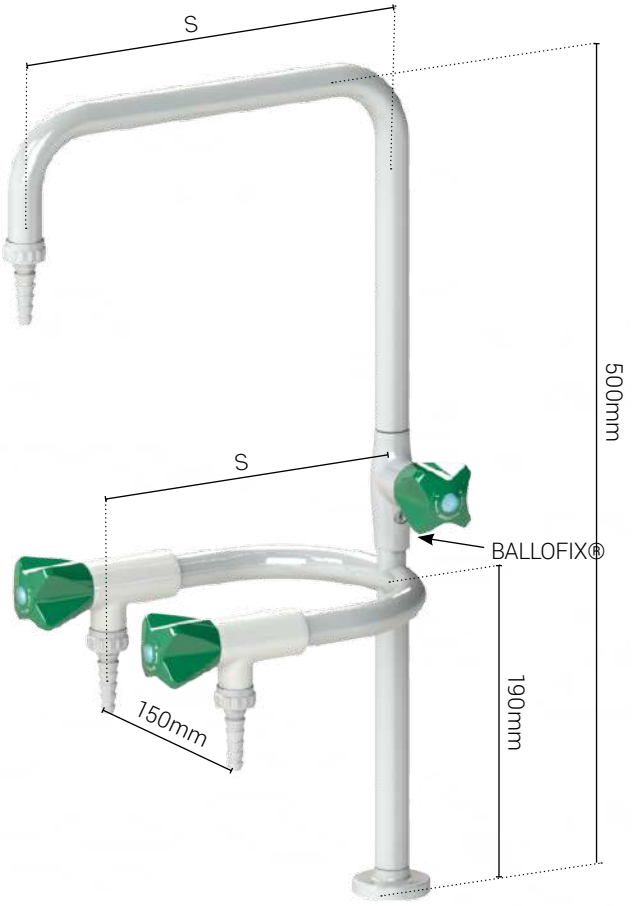

MATERIALS WITH MEDIA CONTACT

Metals: Brass
Plastics: POM, PTFE
Sealing: EPDM
Lubricant: Silicone based
Ceramics: Al_2O_3 96%
Solder: DIN L-Ag55:Sn

ORDERING INFORMATION

For standard configuration please refer to the item numbers below.

Other options:
- aerator
- flow restrictor (5 l/min)
- fixed hose nozzle
- integrated non-return valve
- alternative hose inlet connection / without a hose
- other inlet options (type, length)
- national approvals
- WPH (Water Potable Hot)
- WNH (Water Non-Potable Hot)

Configuration options

Choose handle

	S = 150 mm
Metal handle	2533 078 10**XX** - **YY**
Wrist lever	2533 079 10**XX** - **YY**

Replace **XX** with one of these media types:

01 • Potable water, cold **02** • Potable water, hot **07** • Non-potable water, cold **08** • Non-potable water, hot

Replace **YY** with the inlet type you need on page 39

BENCH MOUNTED HANDS-FREE SENSORTAP

SPECIFICATIONS

Spout: 110° swivel action
Servo Controlled Bi-stable Cartridge valve
Hose nozzle: Areator
Temperatur range: 5-65° (41°F - 149°F)
Max. working pressure: 10 bar/145 psi
Enforced flush 72 hours after last use
Weight: 1.6 kg

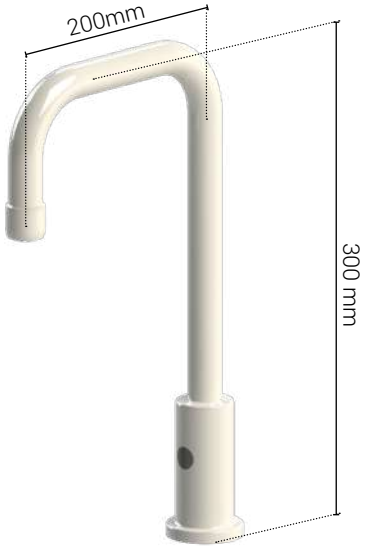

MATERIALS WITH MEDIA CONTACT

Metals: Brass
Plastics: PPSU, SS, PA, SPX (Hose)
Sealing: Rubber, EPDM
Lubricant: Silicone based

ORDERING INFORMATION

For standard configuration please refer to the item numbers below.

Other options:
- See seperate catalogue 94G0246

Configuration options

Choose electrical connection and version





	With fixed temperature	With temperature adjuster	With thermostatic mixing valve
Adaptor: 100-240 V AC 50/60 Hz 	2601 008 1035 - **YY**	2601 008 1035-**YY*** + 2602 002 1035E	2601 008 1035-**YY*** + 2603 011 1035E
Battery: 6 V Lithium 	2601 017 1035 - **YY**	2601 017 1035-**YY*** + 2602 002 1035E	2601 017 1035-**YY*** + 2603 011 1035E

Replace **YY** with the inlet type you need on page 39. (**YY*** means hose is already included)

WALL MOUNTED FITTING 90° VALVE

SPECIFICATIONS

The fitting is delivered with an integrated BALLOFIX® ball valve.

Handle: Metal, BROEN-LAB POLYCOAT powder coated with media indication according to EN13792

Hose nozzle: Removable metal

Headwork: Ceramic

Opening/closing function: 180° (wrist action lever: 90°)

Temperature range: 0-90°C

Max. working pressure: 10 bar / 147 psi

Test pressure: 1 x working pressure

Weight: 2.3 kg

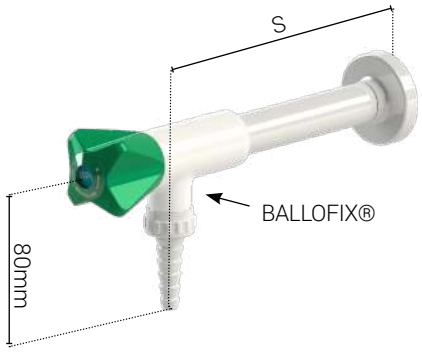

MATERIALS WITH MEDIA CONTACT

Metals: Brass

Plastics: POM

Sealing: EPDM

Lubricant: Silicone based

Ceramics: Al_2O_3 96%

ORDERING INFORMATION

For standard configuration please refer to the item numbers below.

Other options:
- aerator
- flow restrictor (5 l/min)
- fixed hose nozzle
- integrated non-return valve
- angle valve with 45° hose nozzle
- alternative hose inlet connection / without a hose
- other inlet options (type, length)
- national approvals
- WPH (Water Potable Hot)
- WNH (Water Non-Potable Hot)

Configuration options

Choose handle and standout lenght

	S = 75 mm	S = 150 mm	S = 200 mm
Metal handle	2530 335 10**XX** - **YY**	2533 080 10**XX** - **YY**	2533 082 10**XX** - **YY**
Wrist lever	2530 337 10**XX** - **YY**	2533 081 10**XX** - **YY**	2533 083 10**XX** - **YY**

Replace **XX** with one of these media types:

01 • Potable water, cold **02** • Potable water, hot **07** • Non-potable water, cold **08** • Non-potable water, hot

Replace **YY** with the inlet type you need on page 39

WALL MOUNTED FITTING STRAIGHT VALVE

SPECIFICATIONS

The fitting is delivered with an integrated BALLOFIX® ball valve.

Handle: Metal, BROEN-LAB POLYCOAT powder coated with media indication according to EN13792

Hose nozzle: Removable metal

Headwork: Ceramic

Opening/closing function: 180°

Temperature range: 0-90°C

Max. working pressure: 10 bar / 147 psi

Test pressure: 1 x working pressure

Weight: 2.5 kg



MATERIALS WITH MEDIA CONTACT

Metals: Brass

Plastics: POM

Sealing: EPDM

Lubricant: Silicone based

Ceramics: Al_2O_3 96%

ORDERING INFORMATION

For standard configuration please refer to the item numbers below.

Other options:
- aerator
- flow restrictor (5 l/min)
- fixed hose nozzle
- alternative hose inlet connection / without a hose
- other inlet options (type, length)
- national approvals

Configuration options

Choose handle and version

	Without check valve	With check valve
Metal handle	2532 160 10**XX** - **YY**	2532 162 10**XX** - **YY**
Wrist lever	2532 161 10**XX** - **YY**	2532 163 10**XX** - **YY**

Replace **XX** with one of these media types:

01 • Potable water, cold **02** • Potable water, hot **07** • Non-potable water, cold **08** • Non-potable water, hot

Replace **YY** with the inlet type you need on page 39

WALL MOUNTED FITTING WITH SWIVEL U-SPOUT

SPECIFICATIONS

The fitting is delivered with an integrated BALLOFIX® ball valve.

Handle: Metal, BROEN-LAB POLYCOAT powder coated with media indication according to EN13792

Hose nozzle: Removable metal

Headwork: Ceramic

Opening/closing function: 180°

Temperature range: 0-90°C

Max. working pressure: 10 bar / 147 psi

Test pressure: 1 x working pressure

Weight: 2.5 kg

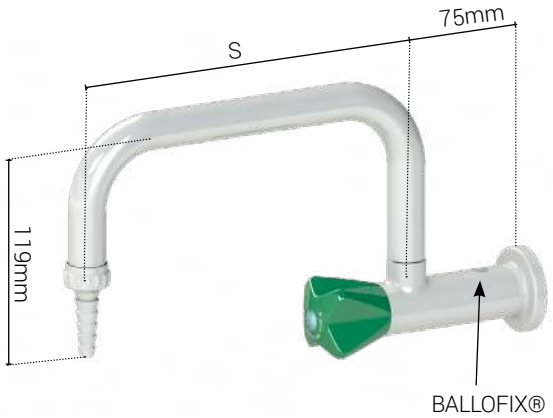

MATERIALS WITH MEDIA CONTACT

Metals: Brass

Plastics: POM

Sealing: EPDM

Lubricant: Silicone based

Ceramics: Al_2O_3 96%

ORDERING INFORMATION

For standard configuration please refer to the item numbers below.

Other options:
- aerator
- flow restrictor (5 l/min)
- integrated check valve to prevent backflow
- fixed hose nozzle
- alternative hose inlet connection / without a hose
- other inlet options (type, length)
- national approvals
- WPH (Water Potable Hot)
- WNH (Water Non-Potable Hot)

Configuration options

Choose handle and standout lenght

	S = 150 mm	S = 200 mm	S = 250 mm	S = 300 mm
Metal handle	2530 365 10**XX** - **YY**	2530 366 10**XX** - **YY**	2530 367 10**XX** - **YY**	2530 368 10**XX** - **YY**
Wrist lever	2530 369 10**XX** - **YY**	2530 370 10**XX** - **YY**	2530 371 10**XX** - **YY**	2530 372 10**XX** - **YY**

Replace **XX** with one of these media types:

01 • Potable water, cold **02** • Potable water, hot **07** • Non-potable water, cold **08** • Non-potable water, hot

Replace **YY** with the inlet type you need on page 39

WALL MOUNTED FITTING WITH SWIVEL S-SPOUT

SPECIFICATIONS

The fitting is delivered with an integrated BALLOFIX® ball valve.

Handle: Metal, BROEN-LAB POLYCOAT powder coated with media indication according to EN13792

Hose nozzle: Removable metal

Headwork: Ceramic

Opening/closing function: 180°

Temperature range: 0-90°C

Max. working pressure: 10 bar / 147 psi

Test pressure: 1 x working pressure

Weight: 2.5 kg

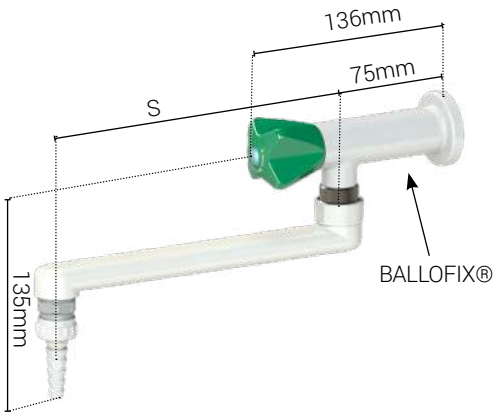

MATERIALS WITH MEDIA CONTACT

Metals: Brass

Plastics: POM

Sealing: EPDM

Lubricant: Silicone based

Ceramics: Al_2O_3 96%

ORDERING INFORMATION

For standard configuration please refer to the item numbers below.

Other options:
- aerator
- flow restrictor (5 l/min)
- integrated check valve to prevent backflow
- fixed hose nozzle
- alternative hose inlet connection / without a hose
- other inlet options (type, length)
- national approvals
- WPH (Water Potable Hot)
- WNH (Water Non-Potable Hot)

Configuration options

Choose handle and standout lenght

	S = 150 mm	S = 200 mm	S = 250 mm	S = 250 mm
Metal handle	2530 406 10**XX** - **YY**	2530 407 10**XX** - **YY**	2530 408 10**XX** - **YY**	2530 409 10**XX** - **YY**
Wrist lever	2530 410 10**XX** - **YY**	2530 411 10**XX** - **YY**	2530 412 10**XX** - **YY**	2530 413 10**XX** - **YY**

Replace **XX** with one of these media types:

01 • Potable water, cold **02** • Potable water, hot **07** • Non-potable water, cold **08** • Non-potable water, hot

Replace **YY** with the inlet type you need on page 39

WALL MOUNTED 90° FITTING WITH REAR WALL CONNECTION (RWC)

SPECIFICATIONS

The fitting is delivered with an integrated BALLOFIX® ball valve.

Handle: Metal, BROEN-LAB POLYCOAT powder coated with media indication according to EN13792

Hose nozzle: Removable metal

Headwork: Ceramic

Opening/closing function: 180° (wrist action lever: 90°)

Temperature range: 0-90°C

Max. working pressure: 10 bar / 147 psi

Test pressure: 1 x working pressure

Weight: 2.3 kg

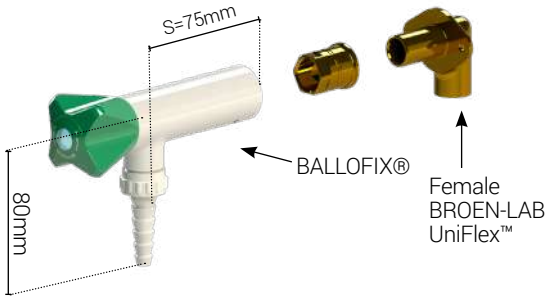

MATERIALS WITH MEDIA CONTACT

Metals: Brass

Plastics: POM

Sealing: EPDM

Lubricant: Silicone based

Ceramics: Al_2O_3 96%

ORDERING INFORMATION

For standard configuration please refer to the item numbers below.

Other options:
- aerator
- flow restrictor (5 l/min)
- fixed hose nozzle
- integrated non-return valve
- angle valve with 45° hose nozzle
- other installation options:
- flange
- straight rear wall connection
- wall thickness 20-40mm
- additional support in case of a thin panel

Configuration options

Choose handle and version

	Without check valve	With check valve
Metal handle	2530 421 10**XX** -40	2530 467 10**XX** -40
Wrist lever	2530 422 10**XX** -40	2530 468 10**XX** -40

Replace **XX** with one of these media types:

01 • Potable water, cold **02** • Potable water, hot **07** • Non-potable water, cold **08** • Non-potable water, hot

Delivered with 90° rear wall connection (max wall thickness 20mm). For possible inlet connections please refer to page 39.

WALL MOUNTED STRAIGHT FITTING WITH REAR WALL CONNECTION (RWC)

Specifications

The fitting is delivered with an integrated BALLOFIX® ball valve.

Handle: Metal, BROEN-LAB POLYCOAT powder coated with media indication according to EN13792

Hose nozzle: Removable metal

Headwork: Ceramic

Opening/closing function: 180° (wrist action lever: 90°)

Temperature range: 0-90°C

Max. working pressure: 10 bar / 147 psi

Test pressure: 1 x working pressure

Weight: 2.3 kg

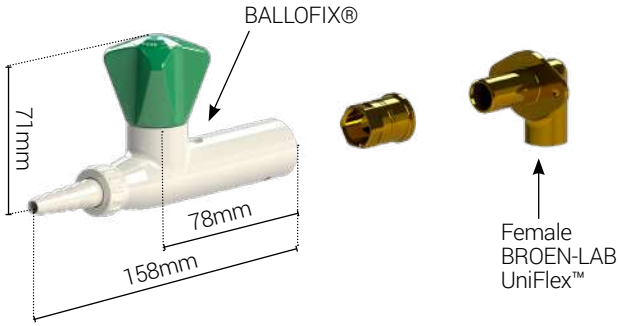

MATERIALS WITH MEDIA CONTACT

Metals: Brass
Plastics: POM
Sealing: EPDM
Lubricant: Silicone based
Ceramics: Al_2O_3 96%

ORDERING INFORMATION

For standard configuration please refer to the item numbers below.

Other options:
- aerator
- flow restrictor (5 l/min)
- fixed hose nozzle
- integrated non-return valve
- angle valve with 45° hose nozzle
- flange
- straight rear wall connection
- wall thickness 20-40mm
- additional support in case of a thin panel

Configuration options

Choose handle and version

	Without check valve	With check valve
Metal handle	2532 209 10**XX** -40	2532 210 10**XX** -40
Wrist lever	2532 211 10**XX** -40	2532 212 10**XX** -40

Replace **XX** with one of these media types:

01 • Potable water, cold **02** • Potable water, hot **07** • Non-potable water, cold **08** • Non-potable water, hot

Delivered with 90° rear wall connection (max wall thickness 20mm). For possible inlet connections please refer to page 39.

WALL MOUNTED FITTING WITH SWIVEL U-SPOUT AND REAR WALL CONNECTION (RWC)

SPECIFICATIONS

The fitting is delivered with an integrated BALLOFIX® ball valve.

Handle: Metal, BROEN-LAB POLYCOAT powder coated with media indication according to EN13792

Hose nozzle: Removable metal

Headwork: Ceramic

Opening/closing function: 180° (wrist action lever: 90°)

Temperature range: 0-90°C

Max. working pressure: 10 bar / 147 psi

Test pressure: 1 x working pressure

Weight: 2.3 kg

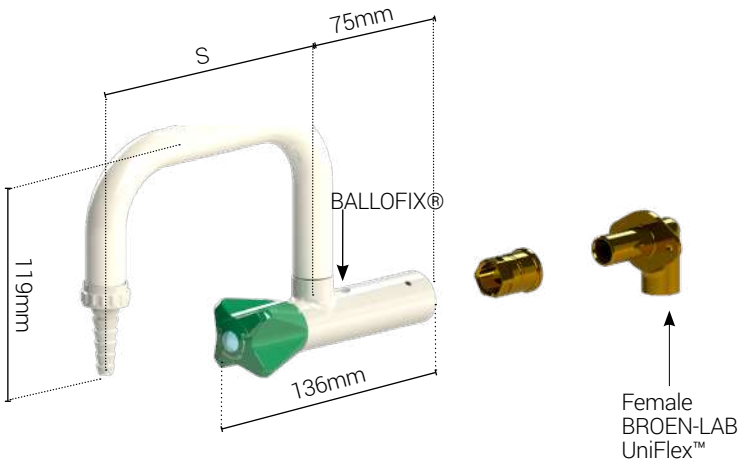

MATERIALS WITH MEDIA CONTACT

Metals: Brass

Plastics: POM

Sealing: EPDM

Lubricant: Silicone based

Ceramics: Al_2O_3 96%

ORDERING INFORMATION

For standard configuration please refer to the item numbers below.

Other options:
- aerator
- flow restrictor (5 l/min)
- fixed hose nozzle
- integrated non-return valve
- S-spout
- national approvals

Configuration options

Choose handle and standout lenght

	S = 150 mm	S = 200 mm	S = 250 mm	S = 250 mm
Metal handle	2530 469 10**XX** -40	2530 470 10**XX** -40	2530 471 10**XX** -40	2530 472 10**XX** -40
Wrist lever	2530 473 10**XX** -40	2530 474 10**XX** -40	2530 475 10**XX** -40	2530 476 10**XX** -40

Replace **XX** with one of these media types:

01 • Potable water, cold **02** • Potable water, hot **07** • Non-potable water, cold **08** • Non-potable water, hot

Delivered with 90° rear wall connection (max wall thickness 20mm). For possible inlet connections please refer to page 39.

WALL MOUNTED FITTINGS WITH 90° VALVES FOR EXPOSED PIPING OR BUILT-IN INSTALLATION

SPECIFICATIONS

The fitting is delivered with an integrated BALLOFIX® ball valve.

Handle: Metal, BROEN-LAB POLYCOAT powder coated with media indication according to EN13792

Hose nozzle: Removable metal

Headwork: Ceramic

Opening/closing function: 180° (wrist action lever: 90°)

Temperature range: 0-90°C

Max. working pressure: 10 bar / 147 psi

Test pressure: 1 x working pressure

Weight: 2.3 kg

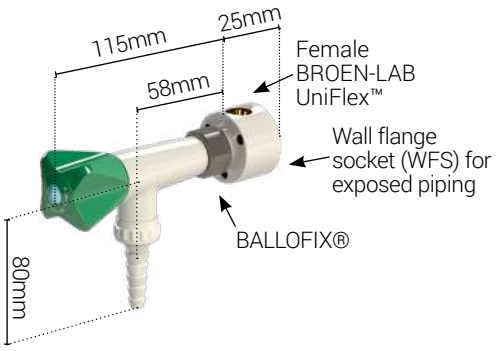

MATERIALS WITH MEDIA CONTACT

Metals: Brass

Plastics: POM

Sealing: EPDM

Lubricant: Silicone based

Ceramics: Al_2O_3 96%

ORDERING INFORMATION

For standard configuration please refer to the item numbers below.

Other options:
- aerator
- flow restrictor (5 l/min)
- fixed hose nozzle
- integrated non-return valve

Valve with a wall flange socket for built-in installation



Configuration options

Choose handle and connection

	without WFS	with WFS for exposed piping	with WFS for built-in-installation
Metal handle	2530 172 10**XX**	2530 280 10**XX**	2530 255 10**XX**
Wrist lever	2530 383 10**XX**	2530 285 10**XX**	2530 384 10**XX**

Replace **XX** with one of these media types:

01 • Potable water, cold **02** • Potable water, hot **07** • Non-potable water, cold **08** • Non-potable water, hot

Delivered with wall flange socket and compression ring fitting for OD10mm CU-pipe. For other options please refer to page 39.

WALL MOUNTED FITTINGS WITH STRAIGHT VALVES FOR EXPOSED PIPING OR BUILT-IN INSTALLATION

SPECIFICATIONS

The fitting is delivered with an integrated BALLOFIX® ball valve.

Handle: Metal, BROEN-LAB POLYCOAT powder coated with media indication according to EN13792

Hose nozzle: Removable metal

Headwork: Ceramic

Opening/closing function: 180° (wrist action lever: 90°)

Temperature range: 0-90°C

Max. working pressure: 10 bar / 147 psi

Test pressure: 1 x working pressure

Weight: 2.3 kg

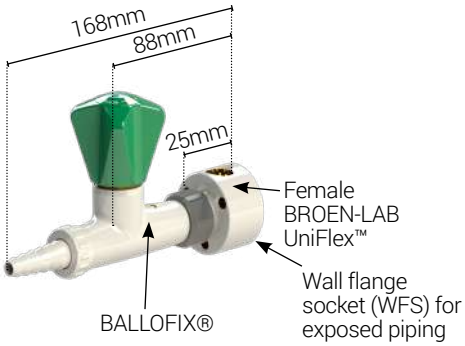

MATERIALS WITH MEDIA CONTACT

Metals: Brass

Plastics: POM

Sealing: EPDM

Lubricant: Silicone based

Ceramics: Al_2O_3 96%

Valve with a wall flange socket for built-in installation

ORDERING INFORMATION

For standard configuration please refer to the item numbers below.

Other options:
- aerator
- flow restrictor (5 l/min)
- fixed hose nozzle
- integrated non-return valve



Configuration options

Choose handle and connection

	without WFS	with WFS for exposed piping	with WFS for built-in-installation
Metal handle	2532 155 10**XX**	2532 179 10**XX**	2532 111 10**XX**
Wrist lever	2532 215 10**XX**	2532 176 10**XX**	2532 216 10**XX**

Replace **XX** with one of these media types:

01 • Potable water, cold **02** • Potable water, hot **07** • Non-potable water, cold **08** • Non-potable water, hot

Delivered with wall flange socket and compression ring fitting for OD10mm CU-pipe. For other options please refer to page 39.

SUSPENDED FITTING WITH TWO 90° VALVE

SPECIFICATIONS

The fitting is delivered with an integrated BALLOFIX® ball valve.

Handle: Metal, BROEN-LAB POLYCOAT powder coated with media indication according to EN13792

Hose nozzle: Removable metal

Headwork: Ceramic

Opening/closing function: 180°

Temperature range: 0-90°C

Max. working pressure: 10 bar / 147 psi

Test pressure: 1 x working pressure

Weight: 2.5 kg

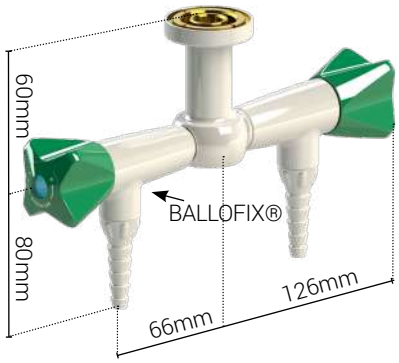

MATERIALS WITH MEDIA CONTACT

Metals: Brass

Plastics: POM

Sealing: EPDM

Lubricant: Silicone based

Ceramics: Al_2O_3 96%

ORDERING INFORMATION

For standard configuration please refer to the item numbers below.

Other options:
- aerator
- fixed hose nozzle
- flow restrictor (5 l/min)
- wrist action levers
- models with single valve, 2 valves 90° and 4 valves
- alternative hose inlet connection / without a hose
- other inlet options (type, length)
- national approvals

Configuration options

Choose handle

	2-valves 180°
Metal handle	2530 047 10**XX** - **YY**
Wrist lever	2530 373 10**XX** - **YY**

Replace **XX** with one of these media types:

01 • Potable water, cold **02** • Potable water, hot **07** • Non-potable water, cold **08** • Non-potable water, hot

Replace **YY** with the inlet type you need on page 39

BENCH MOUNTED TWO HANDLE ONE HOLE MIXER WITH SWIVEL SPOUT

SPECIFICATIONS

Handle: Metal, BROEN-LAB POLYCOAT powder coated with media indication according to EN13792
Spout: Full swivel action
Hose nozzle: Removable metal
Headwork: Ceramic
Opening/closing function: 180° (wrist action lever: 90°)
Temperature range: 0-90°C
Max. working pressure: 10 bar / 147 psi
Test pressure: 1 x working pressure
Weight: 1.8 kg



MATERIALS WITH MEDIA CONTACT

Metals: Brass
Plastics: POM, PTFE
Sealing: EPDM
Lubricant: Silicone based
Ceramics: Al_2O_3 96%

ORDERING INFORMATION

For standard configuration please refer to the item numbers below.

Other options:
- aerator
- flow restrictor (5 l/min)
- fixed hose nozzle
- integrated non-return valve
- fixed spout
- alternative hose inlet connection / without a hose
- OD 10mm Cu pipes
- other inlet options
- national approvals
-110° limited swivel action

Configuration options

Choose handle and standout lenght

	S = 150 mm	S = 200 mm	S = 250 mm	S = 300 mm
Metal handle	2536 001 10**XX** - **YY**	2536 002 10**XX** - **YY**	2536 013 10**XX** - **YY**	2536 012 10**XX** - **YY**
Wrist lever	2536 028 10**XX** - **YY**	2536 014 10**XX** - **YY**	2536 037 10**XX** - **YY**	2536 040 10**XX** - **YY**

Replace **XX** with one of these media types:

39 • Water potable (WPC /WPH)

40 • Water non-potable (WNC /WNH)

Replace **YY** with the inlet type you need on page 39

BENCH MOUNTED ONE HANDLE ONE HOLE MIXER

SPECIFICATIONS

Handle: Metal, BROEN-LAB POLYCOAT powder coated
Spout: 110° limited swivel action
Hose nozzle: Removable plastic (aerator included)
Cartridge: Ceramic (temperature and flow regulation type)
Opening/closing function: 25°, mixing function: ±45°
Temperature range: 0°C - 65°C
Max. working pressure: 10 bar / 147 psi
Weight: 2.8 kg

MATERIALS WITH MEDIA CONTACT

Metals: Brass
Plastics: PP, POM, PTFE, SPX (hose)
Sealing: EPDM
Lubricant: Silicone based
Ceramics: Al_2O_3 96%

ORDERING INFORMATION

For standard configuration please refer to the item numbers below.

Other options:

- no swivel action

- full swivel action



Configuration options

	S = 200 mm
	G35 031 8135

BENCH MOUNTED ONE HANDLE ONE HOLE BIOLAB MIXER

SPECIFICATIONS

Handle: Metal, BROEN-LAB POLYCOAT powder coated with media indication

Spout: 110° swivel action

Areator

Ceramic cartridge

Opening/closing function: 22,5°, mix. function ±45°

Temperature range: 5°C-65°C

Max. working pressure: 10 bar / 147 psi

Weight: 1.7 kg

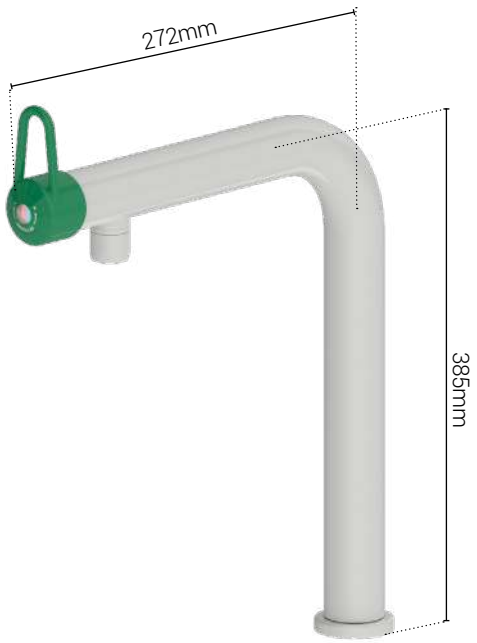

MATERIALS WITH MEDIA CONTACT

Metals: Brass

Sealing: Rubber, EPDM

Lubricant: Silicone based

Ceramics: Al_2O_3 96%

ORDERING INFORMATION

For standard configuration please refer to the item numbers below.

Other options:

Configuration options

Choose handle

Handle body: BROEN-LAB colour 5168 	2535 271 10**XX** - **YY**
Handle body: BROEN-LAB colour 2700 	2535 272 10**XX** - **YY**

Replace **XX** with one of these media types:

 **35** • Water potable (WPC /WPH)  **37** • Water non-potable (WNC /WNH)

Replace **YY** with the inlet type you need on page 39

BENCH MOUNTED ONE HANLDE ONE HOLE MIXER

SPECIFICATIONS

Handle: Metal, BROEN-LAB POLYCOAT powder coated
Spout: Swivel action
Hose nozzle: Aerator
Cartridge: Ceramic (temperature and flow regulation type)
Opening/closing function: 25°, mixing function: ±45°
Temperature range: 0°C - 90°C
Max. working pressure: 10 bar / 147 psi
Test pressure: 1 x working pressure
Weight: 2.4 kg



MATERIALS WITH MEDIA CONTACT

Metals: Brass
Plastics: POM, PTFE
Sealing: EPDM
Lubricant: Silicone based
Ceramics: Al_2O_3 96%

ORDERING INFORMATION

For standard configuration please refer to the item numbers below.

Other options:

- integrated non-return valve
- removable and fixed hose nozzles
- flow restrictor (5 l/min
- alternative hose inlet connections

-10mm Cu pipes
-110° limited swivel acction

Configuration options

Choose standout lenght

	S = 150 mm	S = 200 mm	S = 250 mm	S = 300 mm
	2535 038 1035 - **YY**	2535 039 1035 - **YY**	2535 040 1035 - **YY**	2535 041 1035 - **YY**

Replace **YY** with the inlet type you need on page 39

BENCH MOUNTED ONE HANLDE ONE HOLE MIXER WITH HAND SHOWER

SPECIFICATIONS

Handle: Metal, BROEN-LAB POLYCOAT powder coated
Spout: Swivel action
Hose nozzle: Aerator
Cartridge: Ceramic (temperature and flow regulation type)
Opening/closing function: 25°, mixing function: ±45°
Temperature range: 0°C - 90°C
Max. working pressure: 10 bar / 147 psi
Test pressure: 1 x working pressure
Weight: 3.0 kg

MATERIALS WITH MEDIA CONTACT

Metals: Brass
Plastics: POM, PTFE, SPX (hose), ABS
Sealing: EPDM
Lubricant: Silicone based
Ceramics: Al_2O_3 96%

ORDERING INFORMATION

For standard configuration please refer to the item numbers below.

Other options:

- integrated non-return valve
- removable and fixed hose nozzles
- flow restrictor (5 l/min)
-110° limited swivel action

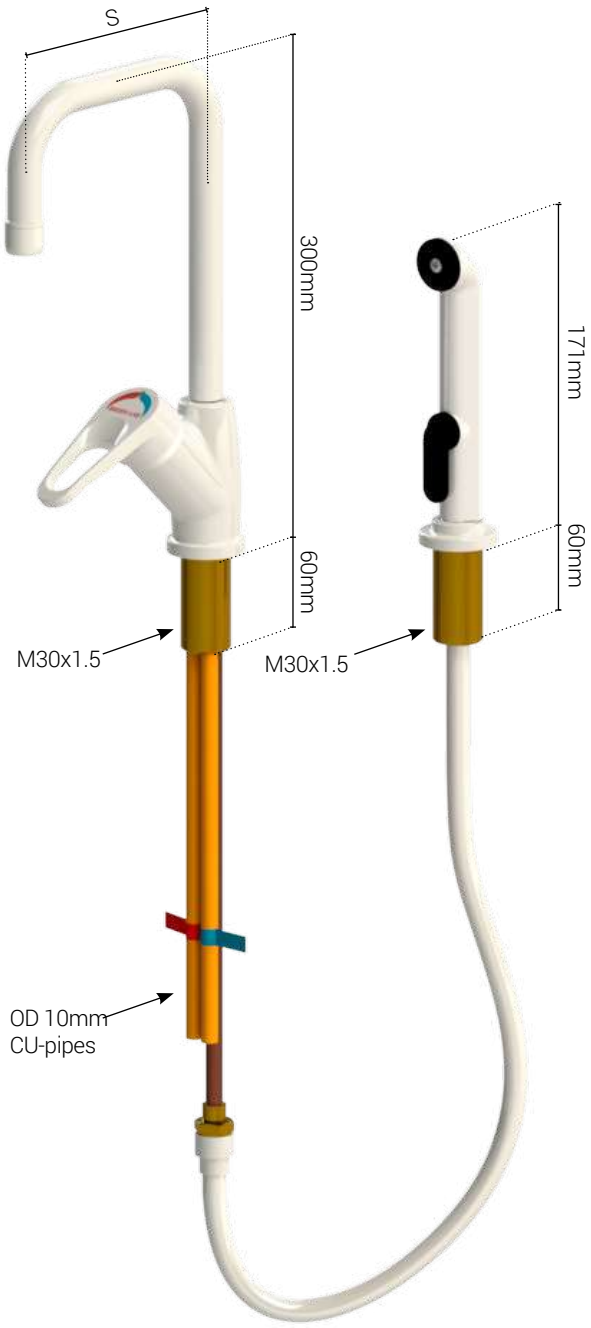

Configuration options

Choose standout lenght

	S = 150 mm	S = 200 mm	S = 250 mm	S = 300 mm
	2535 042 1035-52C	2535 043 1035-52C	2535 044 1035-52C	2535 045 1035-52C

BENCH MOUNTED TWO HANDLE TWO HOLE MIXER ON COLUMNS WITH SWIVEL SPOUT

SPECIFICATIONS

Handle: Metal, BROEN-LAB POLYCOAT powder coated with media indication according to EN13792

Spout: Full swivel action

Hose nozzle: Removable metal

Headwork: Ceramic

Opening/closing function: 180° (wrist action lever: 90°)

Temperature range: 0-90°C

Max. working pressure: 10 bar / 147 psi

Test pressure: 1 x working pressure

Weight: 1.8 kg



MATERIALS WITH MEDIA CONTACT

Metals: Brass
Plastics: POM, PTFE
Sealing: EPDM
Lubricant: Silicone based
Ceramics: Al_2O_3 96%

ORDERING INFORMATION

For standard configuration please refer to the item numbers below.

Other options:

- aerator
- flow restrictor (5 l/min)
- integrated check valve
- S-spout
- other inlet lengths and options

For further information please contact your local BROEN-LAB representative.

Configuration options

Choose handle and standout lenght

	S = 150 mm	S = 200 mm	S = 250 mm	S = 300 mm
Metal handle	2536 120 10**XX** - **YY**	2536 121 10**XX** - **YY**	2536 122 10**XX** - **YY**	2536 123 10**XX** - **YY**
Wrist lever	2536 124 10**XX** - **YY**	2536 125 10**XX** - **YY**	2536 126 10**XX** - **YY**	2536 127 10**XX** - **YY**

Replace **XX** with one of these media types:

39 • Water potable (WPC /WPH)

40 • Water non-potable (WNC /WNH)

Replace **YY** with the inlet type you need on page 39

BENCH/WALL MOUNTED TWO HANDLE TWO HOLE MIXER WITH SWIVEL SPOUT

SPECIFICATIONS

The fitting is delivered with an integrated BALLOFIX® ball valve.

Handle: Metal, BROEN-LAB POLYCOAT powder coated with media indication according to EN13792

Spout: Full swivel action

Hose nozzle: Removable metal

Headwork: Ceramic

Opening/closing function: 180° (wrist action lever: 90°)

Temperature range: 0-90°C

Max. working pressure: 10 bar / 147 psi

Test pressure: 1 x working pressure

Weight: 1.8 kg

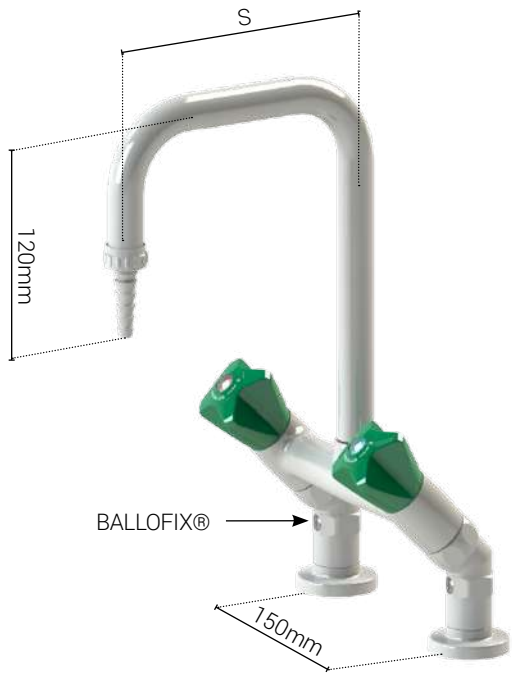

MATERIALS WITH MEDIA CONTACT

Metals: Brass
Plastics: POM, PTFE
Sealing: EPDM
Lubricant: Silicone based
Ceramics: Al_2O_3 96%

ORDERING INFORMATION

For standard configuration please refer to the item numbers below.

Other options:
- aerator
- flow restrictor (5 l/min)
- other standouts (250mm, 300mm)
- S-spout
- integrated check valve
- other inlet lengths and options
-110° limited swivel action

For further information please contact your local BROEN LAB representative.

Configuration options

Choose handle and standout lenght

	S = 150 mm	S = 200 mm
Metal handle	2536 097 10**XX** - **YY**	2536 061 10**XX** - **YY**
Wrist lever	2536 098 10**XX** - **YY**	2536 078 10**XX** - **YY**

Replace **XX** with one of these media types:

39 • Water potable (WPC /WPH)

40 • Water non-potable (WNC /WNH)

Replace **YY** with the inlet type you need on page 39

WALL MOUNTED TWO HANDLE TWO HOLE MIXER WITH SWIVEL SPOUT

SPECIFICATIONS

Handle: Metal, BROEN-LAB POLYCOAT powder coated with media indication according to EN13792

Spout: Full swivel action

Hose nozzle: Removable metal

Headwork: Ceramic

Opening/closing function: 180° (wrist action lever: 90°)

Temperature range: 0-90°C

Max. working pressure: 10 bar / 147 psi

Test pressure: 1 x working pressure

Weight: 1.8 kg

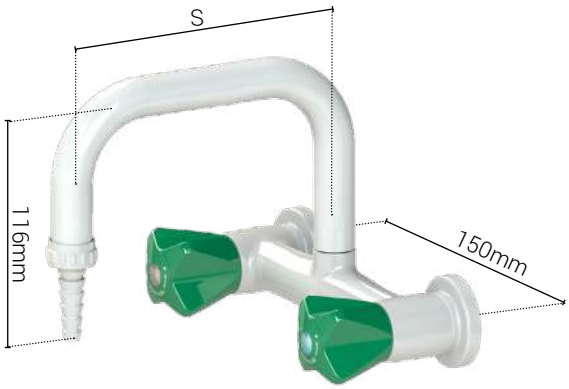

MATERIALS WITH MEDIA CONTACT

Metals: Brass
Plastics: POM, PTFE
Sealing: EPDM
Lubricant: Silicone based
Ceramics: Al_2O_3 96%

ORDERING INFORMATION

For standard configuration please refer to the item numbers below.

Other options:

- aerator
- flow restrictor (5 l/min)
- integrated check valve
- S-spout
- other inlet lengths and options (RWC, eccentric, etc.)
- other options for hose inlet connections
-110° limited swivel action

For further information please contact your local BROEN-LAB representative.

Configuration options

Choose handle and standout lenght

	S = 150 mm	S = 200 mm	S = 250 mm	S = 300 mm
Metal handle	2536 128 10**XX** - **YY**	2536 129 10**XX** - **YY**	2536 130 10**XX** - **YY**	2536 131 10**XX** - **YY**
Wrist lever	2536 132 10**XX** - **YY**	2536 133 10**XX** - **YY**	2536 134 10**XX** - **YY**	2536 135 10**XX** - **YY**

Replace **XX** with one of these media types:

WPC WPH **39** • Water potable (WPC /WPH)

WNC WNH **40** • Water non-potable (WNC /WNH)

Replace **YY** with the inlet type you need on page 39

WALL MOUNTED ONE HANDLE TWO HOLE MIXER WITH SWIVEL SPOUT

SPECIFICATIONS

Handle: Metal, BROEN-LAB POLYCOAT powder coated
Spout: Swivel action
Hose nozzle: Aerator
Cartridge: Ceramic (temperature and flow regulation type)
Opening/closing function: 25°, mixing function: ±45°
Temperature range: 0°C - 90°C
Max. working pressure: 10 bar / 147 psi
Test pressure: 1 x working pressure
Inlets: Eccentric couplings with male G1/2
Weight: 1.5 kg

MATERIALS WITH MEDIA CONTACT

Metals: Brass
Plastics: POM, PTFE
Sealing: EPDM
Lubricant: Silicone based
Ceramics: Al_2O_3 96%

ORDERING INFORMATION

For standard configuration please refer to the item numbers below.

Other options:
- removable hose nozzle
- bench mounted model
- different inlet connections
  (with BROEN-LAB UniFlex™ rear wall connection, lead-in. etc)

With long handle

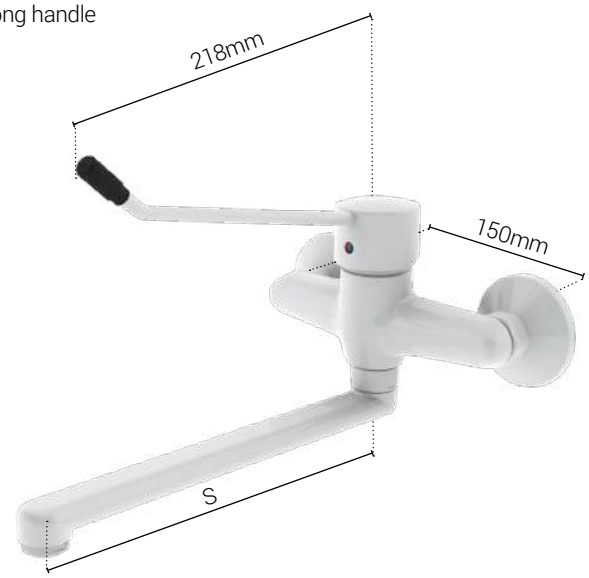

With short handle

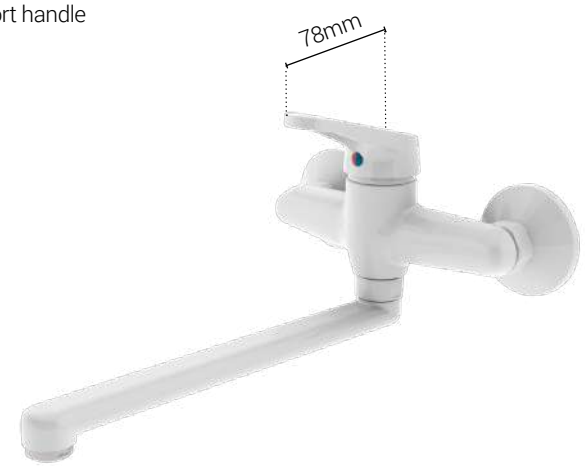

Configuration options

Choose handle and standout lenght

	S = 200 mm	S = 250 mm	S = 300 mm
Short handle	2535 010 1035	2535 004 1035	2535 016 1035
Long handle	2535 007 1035	2535 001 1035	2535 013 1035

BROEN-LAB UniFlex™ flexible hoses →



BROEN-LAB offers BROEN-LAB UniFlex™ hoses as an easy way to make the installation in the laboratory where safety and efficiency are required. BROEN-LAB UniFlex™ hoses are the ideal solution where there is a higher requirement for flexibility.
Installation with flexible hoses saves you time and labor • in other words reduced installation costs.

A wide range of fittings and lengths available for BROEN-LAB UniFlex™ hoses enables customers to choose the perfect hose for their application.

BROEN-LAB UniFlex™ hoses for water are manufactured of soft cross-linked polyethylene (SPX), which is approved for use with drinking water and meets all hygienic requirements. From the outside the hose is secured by a Stainless Steel braiding that ensures long service life and durability.

BROEN-LAB UniFlex™ connection fittings and adaptors for CU, Stainless Steel and PEX pipes →



The total design of the system must be taken into consideration when selecting the type of BROEN-LAB UniFlex™ flexible hose or pipe for specific media. Only then products will provide safe, trouble-free operation.

Please always check local requirements/regulations regarding installation and maintenance of hoses/flexible pipes!

A very high quality of materials applied for production of hoses and Stainless Steel flexible pipes, which are supplied by BROEN-LAB, and a long-time experience in making installations worldwide, combined with optimal installation conditions, may assure a lifetime for a hose to be more than 10 years. Expected lifetime can only be achieved under normal use and proper installation methods, which are described in technical specifications, i.e. max. working pressure, max. temperature, physical installation methods and other. Any nonconformity to specifications decreases the lifetime of a hose/flexible pipe.

Hose / Factors*	SPX 93V
Inner hose material with media contact	SPX
Outer hose material / braiding	Stainless Steel AISI 304
Sealing material	EPDM
Inside diameter	8.2 mm
Outside diameter	12 mm
Max. working pressure	10 bar
Max. working temperature	90°C
Min. bending radius (inner)	40 mm
Leakage rate	-
UV resistance	++
Range of connections	+++

93V - BROEN-LAB UNIFLEX™ SPX HOSES FOR WATER

INLET CONNECTIONS
93 V **XX** XX XXXX

61	3/8" NPT swivel connection	
32	Male G3/8" fixed connection	
31	Male G1/2" fixed connection	
33	Male G3/4" fixed connection	
34	3/8" NPT fixed connection	
35	3/8" NPT swivel connection	
41	Female G3/8" union nut connection	
46	90° Female G3/8" union nut connection	
40	Female G1/2" union nut connection	
45	90° Female G1/2 " union nut connection	
42	Female G3/4" union nut connection	
09	OD3/8 " connection compression fitting	
10	OD10mm connection for compression fittings	
12	OD12mm connection for compression fittings	
13	OD1/2" connection for compression fittings	
15	OD15mm connection for compression fittings	
65	OD15mm connection for press fittings	
20	Straight BROEN-LAB UniFlex™ connection with EPDM O-ring	
25	45° BROEN-LAB UniFlex™ connection with EPDM O-ring	
30	90° BROEN-LAB UniFlex™ connection with EPDM O-ring	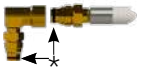

OUTLET CONNECTIONS
93 V XX **XX** XXXX

20	Straight BROEN-LAB UniFlex™ connection with EPDM O-ring	
25	45° BROEN-LAB UniFlex™ connection with EPDM O-ring	
30	90° BROEN-LAB UniFlex™ connection with EPDM O-ring	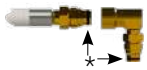
51	M10x1mm short connection with EPDM O-ring Please note: M10 connections can only be used for mixers and multimedia fittings	
52	M10x1mm long connection with EPDM O-ring Please note: M10 connections can only be used for mixers and multimedia fittings	

*All O-rings are lubricated with silicone based lubricant

SPECIFICATIONS

Inner hose material: SPX (soft PEX)
Braiding: Stainless Steel with one green stripe
Materials with media contact: SPX, brass, EPDM with silicone based lubricant
Sealing: EPDM, Aramid fiber/NBR
Inside diameter: 8.2 mm
Outside diameter: 12 mm
Max. working pressure: 10 bar
Max. working temperature: 90°C
Bending radius (inner): ≥ 40 mm
Min. length with connections: 160 mm

LENGTH
93 V XX XX **XXXX**

SPX hose with braiding in Stainless Steel

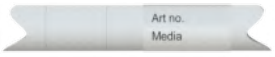

Marking for water with Part no. and Media indication

HOSE LENGTHS

Definition of length (L)



Definition of length (L)



If 45° and 90° elbows occur on the same hose, it will as default be mounted in U-form

**Standard lengths of hoses (L):

0500 = 500 mm
0700 = 700 mm
1000 = 1000 mm
1200 = 1200 mm
1500 = 1500 mm
2000 = 2000 mm
2500 = 2500 mm
3000 = 3000 mm

Length tolerance of hoses:
L = ≤400 mm (- 0, +10 mm)
L = 401 mm to 1000 mm (- 0, + 20 mm)
L = >1000 mm (- 0, + 30 mm)

** Other lengths are available on request

EXAMPLE OF HOSE CONFIGURATION

1200 mm hose with OD 12 mm inlet connection and straight UniFlex™ outlet connection

93V12201200

HEADWORK - METAL HANDLE

Specifications

BROEN-LAB UniFlex™ water fittings with metal handles are delivered with ceramic 180° turn headworks.
Water fittings with ceramic headwork offer quick and precise adjustment and a long service life.

Opening/closing function: 1 x 180° turn

Media: Hot/cold water

Temperature range: Maximum 90°C

Max. working pressure: 10 bar / 147 psi
Test pressure: 1 x working pressure

Materials with media contact

Metals: Brass

Sealing: EPDM

Plastics: POM

Lubricant: Silicone based

Ceramics: Al-oxyd 96%

Ordering information

Ceramic headwork
No. 1976000

Flow Chart

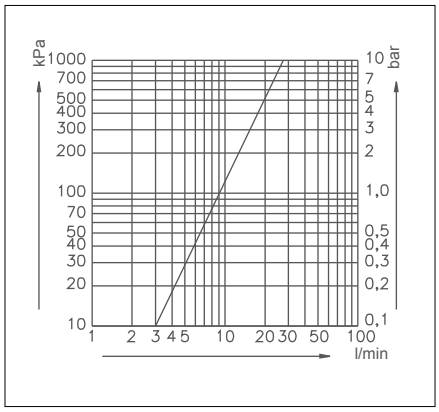



Ceramic headwork

HEADWORK - WRIST ACTION LEVER HANDLE

Specifications

BROEN-LAB UniFlex™ water fittings with wrist action lever are delivered with a ceramic 90° turn headwork.

Opening/closing function: 90° turn

Media: Hot/cold water

Temperature range: Maximum 90°C

Max. working pressure: 10 bar / 147 psi

Test pressure: 1 x working pressure

Materials with media contactMetals: Brass

Sealing: EPDM

Plastics: POM

Lubricant: Silicone based

Ceramics: Al-oxyd 96%

Ordering information

LEFT TURN CLOSING
Ceramic headwork
No. 19764000

RIGHT TURN CLOSING
Ceramic headwork
No. 19765000

Flow Chart

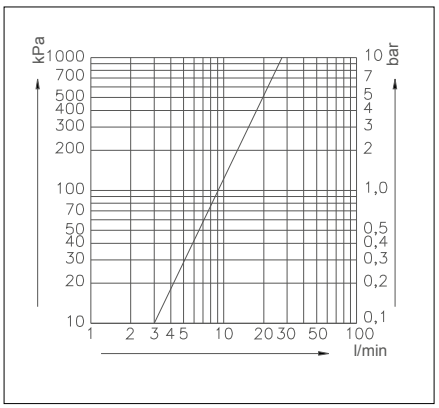



Ceramic headwork

M19x1 - Nozzles and aerators for spouts

	Removable nozzle Polypropylene	Fixed nozzle Polypropylene	Aerator	Removable nozzle metal	Fixed nozzle metal
Adaptor		No adaptor needed			No adaptor needed
	2539 003 1001		2539 005 1001	2539 007 1001	
Nozzle/Aerator			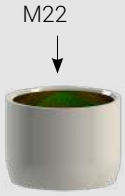		
	2539 004 1001	2539 010 1001	2539 006 1001	2539 008 1001	2539 009 1001

G3/8" - Nozzles and aerators for valves and outlets

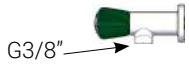	Removable nozzle Polypropylene	Fixed nozzle Polypropylene	Aerator	Removable nozzle metal	Fixed nozzle metal
Adaptor		No adaptor needed			No adaptor needed
	2539 048 1001		2539 064 1001	2539 043 1001	
Nozzle/Aerator			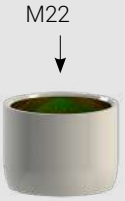		
	2539 004 1001	2539 040 1001	2539 006 1001 Aerator with integrated flow restrictor 5 l/min: 2539 045 1001	2539 008 1001	2539 042 1001

Illustration	Description	BROEN-LAB item no.
	Mounting set for G1/2" connection Mounting set for M30x1.5 connection	19 141 000 19 190 000
	1/2" NPT inlet with female BROEN-LAB UniFlex™ connection (incl. O-ring) L = 30mm L = 60mm L = 90mm	 15 502 33V Code -**05** 15 274 54V Code -**14** 15 502 46V Code -**18**
	ISO 228/1-G1/2" inlet with female BROEN-LAB Ø14,7x6,4 connection (incl. o-ring) L = 30mm L = 60mm L = 90mm	 15 501 33 Code -**02** 15 501 12 Code -**08** 15 501 46 Code -**17**
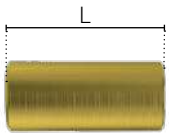	Threaded inlet pipe M30x1.5 L = 30mm L = 60mm L = 90mm	 19 190 03 Code -**50** 19 190 02 Code -**52** 19 190 04 Code -**54**
	Wall flange socket (WFS) (for exposed piping)	02 101 309G
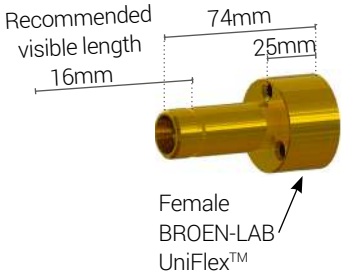	Wall flange socket (WFS) (for built-in installation)	02 101 31G
	Cover flange for wall flange socket (WFS)	14 923 049G
	Metal handle with media indication according to EN 13792	19 160 149 10**XX** Replace **XX** with the media on page 39
	Wrist action lever	See sparepart catalogue 99B0108

Illustration	Description	BROEN-LAB item no.
	Water jet filter pump (inlet: union nut G3/4, adapter to female G1/2 is included)	19 199 009
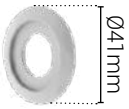	Flange (wall thickness 0-20mm)	1521 0579G
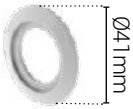	Flange (wall thickness 20-40mm)	1521 1789G
	Nut (wall thickness 0-20mm)	1521 036
	Nut (wall thickness 20-40mm)	1521 054
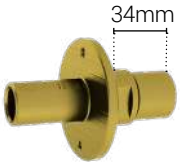	Straight Rear Wall Connection (RWC)	1521 088
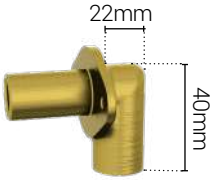	90° Rear Wall Connection (RWC)	1521 052
	Rear wall support plate	1521 092

ORDERING INFORMATION

Generally, item number for BROEN-LAB UniFlex™ fittings has the following structure:

25 XX XXX 10 XX - XX X

BROEN-LAB Series no.

Models
30 • Angle valves
32 • Straight valves
33 • Valves on a column
34 • One handle water fittings
35 • One handle mixers
36 • Two handle mixers

Serial number

***Country code**
10 • International
30 • Japan
80 • Denmark
81 • Germany
82 • UK
83 • Benelux
84 • Australia

Media code
01 • Water potable, cold (WPC)
02 • Water potable, hot (WPH)
07 • Water non-potable, cold (WNC)
08 • Water non-potable, hot (WNH)
35 • Tempered water (one handle mixer)
39 • Water potable (WPC /WPH)
40 • Water non-potable (WNC /WNH)

Inlet type
See page 39

Hose type
See page 39

For other configuration options please contact your local BROEN-LAB representative.

ORDERING INFORMATION

Number	Inlet design	Drilling template
-05 Taps Two hole mixers	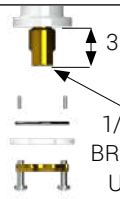	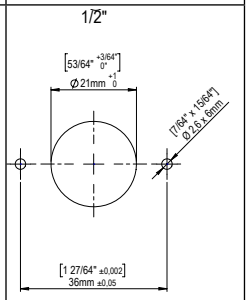
-14 Taps Two hole mixers	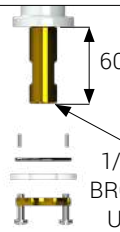	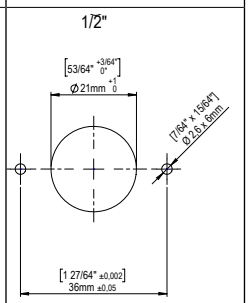
-18 Taps Two hole mixers	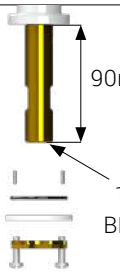	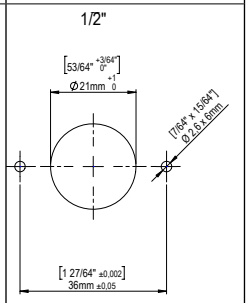
-02 Taps Two hole mixers	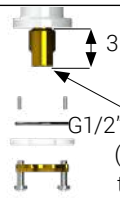	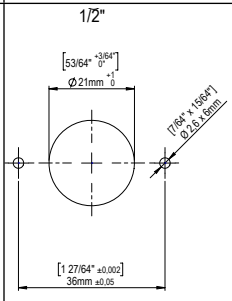
-08 Taps Two hole mixers	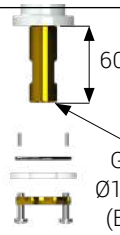	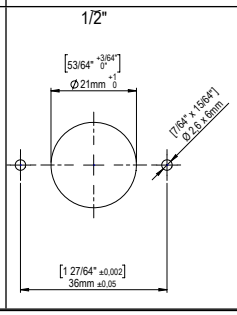

Number	Inlet design	Drilling template
-17 Taps Two hole mixers	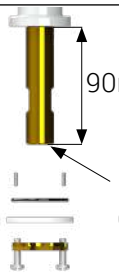	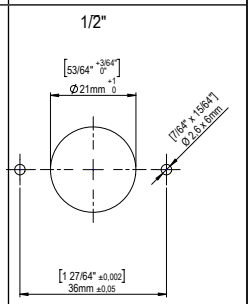
-50 Taps Two hole mixers One hole mixers	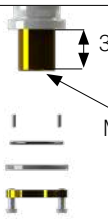	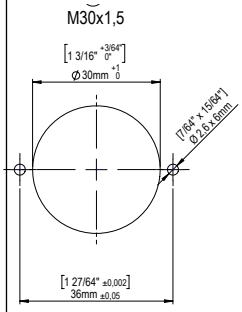
-52 Taps Two hole mixers One hole mixers	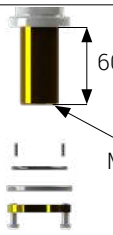	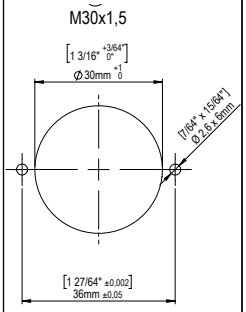
-54 Taps Two hole mixers One hole mixers	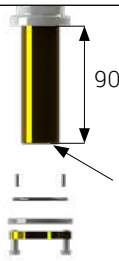	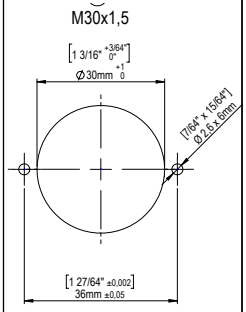



No pipe/hose
No code



OD 10 mm
Code "B"



CU-pipes
Code "C"



G3/8" Union nut
Code "D"



G 1/2" Union nut
Code "E"

OD 15 mm
Code "H"

HEADQUARTER

BROEN-LAB A/S
Drejervaenget 2
5610 Assens
Denmark

Tel. +45 6376 6376
Fax +45 6471 2476

lab@broen-lab.com
broen-lab.com

INTERNATIONAL OFFICES

BROEN-LAB Ltd.
Tel. +44 121 522 4515
Fax +44 121 522 4535

lab@broen-lab.com
broen-lab.com

BROEN-LAB Singapore Pte. Ltd.
25 International Business Park
#04-60A German Centre
Singapore 609916

Tel. +65 6298 0662
Fax +65 62 98 04 68

lab@broen-lab.com
broen-lab.com

BROEN-LAB GmbH
Tel. +45 6376 6376
Fax +45 6471 2476

lab@broen-lab.com
broen-lab.com

BROEN-LAB Sverige AB
Tel. +45 6376 6376
Fax +45 6471 2476

lab@broen-lab.com
broen-lab.com

BROEN-LAB Inc.
15 Constitution Drive
Suite 122
NH 03110
Bedford
USA

Tel. +1 603 310 5089

lab@broen-lab.com
broen-lab.com

BROEN-LAB develops, manufactures and sells Laboratory Fittings, Emergency Shower Systems and Eye Wash Systems into a broad spectrum of laboratories and industrial locations; sectors include Pharmaceutical, Food&Beverage and Academia. Our expertise and product quality ensure optimal solutions compliant to all relevant international norms setting new standards in risk mitigation in modern research and development facilities.

BROEN-LAB offers solutions that ensure the functionality, compliance, hygiene, durability and safety are of the highest priority. For more than 50 years our products have been integrated into a wide variety of workplaces, laboratories, hospitals and industrial locations, with features that are assessed and designed to be flexible, durable and compliant offering a broad range of options tailored to each location. This inherent design integrity provides confidence in the solution adopted wherever in the world these are applied.

BROEN-LAB is a collaboration partner in the design and layout of your next laboratory and it's integrated safety.

BROEN-LAB A/S ISO 9001 certification
In September 1991 BROEN-LAB A/S was certified according to ISO 9001 as one of the first Danish companies. The certification was carried out by Bureau Veritas, Denmark, for our Danish site in Assens.
The quality management system of BROEN-LAB A/S now complies with detailed specifications laid down by the internationally acknowledged EN ISO 9001:2015. This certification will further contribute to reputation for quality and reliability of BROEN-LAB A/S.

BROEN-LAB A/S ISO 14001:2015 certification
In December 2022 we got certified according to ISO 14001 in Environmental certification. The new certification was carried out by Bureau Veritas, Denmark, for Danish site in Assens.
The Environment ISO14001 management system of BROEN-LAB A/S is included in internationally acknowledged EN ISO 9001:2015. Both certifications furthermore contribute to reputation for quality and reliability of BROEN-LAB A/S.